Bore Gages
SERIES 526 — for Extra Small Holes

- This series allows for agile and highly accurate comparative measurement of ø7 to 18 mm inside diameters.
- We offer an array of indicators. Contact us if you prefer any indicator other than the standard recommended indicator.
- Optional stand (**215-120-10**) is available for efficient measurement of multiple small holes.

526-101

Note: The dial indicator and the dial protection cover are optional.

SPECIFICATIONS

Metric

Order No.	Range (mm)	Accuracy* (µm)	Repeatability* (µm)	Bore gage	Dial indicator	Dial protection cover	Setting ring
526-101	7 - 10	4	2	**526-101**	Not supplied	Not supplied	Not supplied
526-102	10 - 18	6		**526-102**			
526-124-20	7 - 10	4		**526-101**	**2109AB-10** (Graduation: 0.001 mm)	**21DZA000**	
526-125-20	10 - 18	6		**526-102**			
526-126-20	7 - 10	4		**526-101**	**2046AB** (Graduation: 0.01 mm)		
526-127-20	10 - 18	6		**526-102**			

Inch

Order No.	Range (in)	Accuracy* (in)	Repeatability* (in)	Bore gage	Dial indicator	Dial protection cover	Setting ring
526-103	0.3 - 0.4	0.00016	0.00008	**526-103**	Not supplied	Not supplied	Not supplied
526-104	0.4 - 0.7	0.00024		**526-104**			
526-122-20	0.3 - 0.4	0.00016		**526-103**	**2923AB-10** (Graduation: 0.0001 in)	**21DZA000**	
526-123-20	0.4 - 0.7	0.00024		**526-104**			
526-119-20	0.3 - 0.4	0.00016		**526-103**	**2922AB** (Graduation: 0.0005 in)	**21DZA000**	
526-120-20	0.4 - 0.7	0.00024		**526-104**			

* Accuracy of the bore gage alone.
Note: Setting rings are not supplied.
Please purchase them separately if necessary. For details of the setting rings, refer to page C-52.

DIMENSIONS

Unit: mm

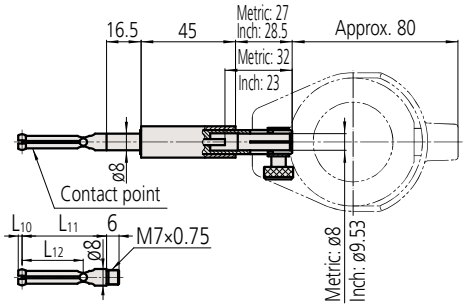

STANDARD ACCESSORIES

Bore gage (Main body)	Contact point						Spanner
	Marked No.	Order No.	Range	L_{10}	L_{11}	L_{12}	Order No.
526-101 **526-103**	1	**102469**	7.0 - 7.5 mm/0.28 - 0.30 in	1.8	40	29.2	**102148**
	2	**102470**	7.5 - 8.0 mm/0.30 - 0.32 in				
	3	**102471**	8.0 - 8.5 mm/0.32 - 0.34 in				
	4	**102472**	8.5 - 9.0 mm/0.34 - 0.36 in				
	5	**102473**	9.0 - 9.5 mm/0.36 - 0.38 in				
	6	**102474**	9.5 - 10.0 mm/0.38 - 0.40 in				
526-102 **526-104**	1	**102454**	10 - 11 mm/0.40 - 0.44 in	2.1	46	38	**102148**
	2	**102455**	11 - 12 mm/0.44 - 0.48 in	2.7			
	3	**102456**	12 - 13 mm/0.48 - 0.52 in				
	4	**102457**	13 - 14 mm/0.52 - 0.56 in				
	5	**102458**	14 - 15 mm/0.56 - 0.60 in				
	6	**102459**	15 - 16 mm/0.60 - 0.64 in				
	7	**102460**	16 - 17 mm/0.64 - 0.68 in				
	8	**102461**	17 - 18 mm/0.68 - 0.72 in				

Note: Contact point is consumable part. Please replace it with new one when degrading of accuracy, operation, or measuring range.

Measurement example

Measurement Principle

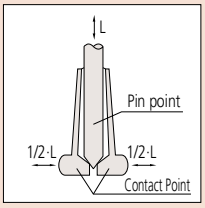

The dial protection cover, recommended indicators

Refer to page C-50.

Spanner
102148

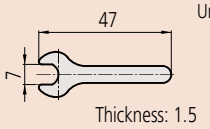

Unit: mm

Mitutoyo reserves the right to change any or all aspects of any product specification, including prices, designs and service content, without notice.